Z5555-K

Z-HPT™ High Performance, 1.28 GPF, ADA, Elongated, Siphon Jet Toilet TAG _____

Architectural/Engineering Specification:

Vitreous china, high efficiency, 1.28 gpf low consumption, high performance siphon-jet toilet with 3” flush valve, elongated front rim and 12” standard rough-in.

Product Features:

- 1.28 gpf (gallons per flush)
- High efficiency toilets (HET) reduces potable water usage over 20%
- Vitreous china
- 3” Flush valve for powerful flushing
- Chrome plated metal handle
- Elongated front rim
- EcoVantage® siphon-jet design
- Extra large foot print for easy retro-fit
- 2 1/8” Fully glazed trapway
- Chloramine resistant internal components
- Maximum performance (MaP) score of 1000g
- Concealed sanitary bar
- 2 1/2” Trap seal
- 10” x 8” water surface
- Includes bolt caps
- Shipping weight: 89 lbs.

Recommended Trim:

- ☐ Z5958SS-EL
  Elongated, white, closed front toilet seat with cover & stainless steel check hinge.
- ☐ Z5972-COMB
  Closet bolt/wax ring kit.
- ☐ Z8800-CR
  Standard stop with flexible closet riser.

Optional Trim:

- ☐ Z5975-FLO-JR PVC Flo-Bowl Jr. closet flange kit

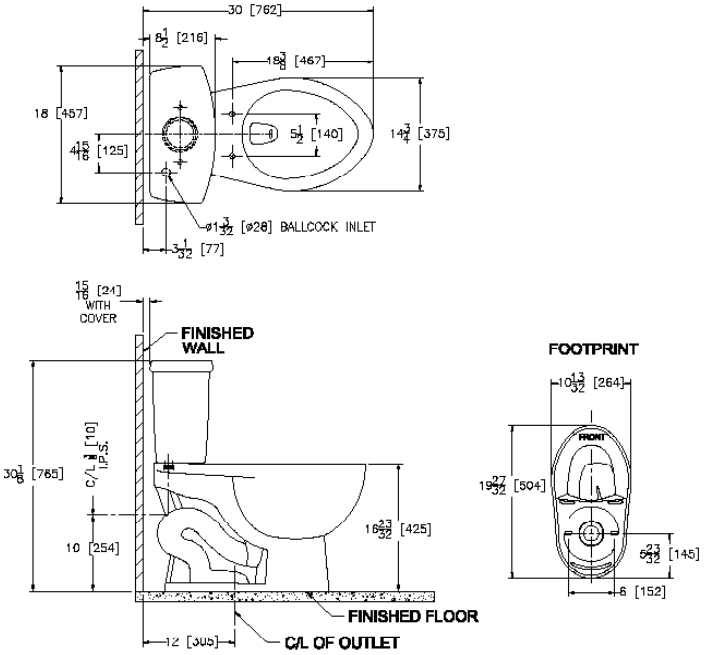

Rough-in/Overview dimensions for Z5555 Series

See Zurn One Systems for suggested packages.

Architectural/Engineering Approval

The information contained in this document is subject to change without notice.
Please contact Zurn for most up to date information.

Compliance and Certification:

- ADA Compliant
- WaterSense Compliant

This product should be used with a WaterSense labeled counterpart with a compatible flush volume to ensure that the entire system meets the requirements for water efficiency and performance.

Meets the American Disabilities Guidelines and ANSI A117.1 requirements when installed according to these requirements.
Fixture dimensions meet ASME A112.19.2/CSA B45.1 requirements.
In Canada - Consult local codes and standards.

ZURN INDUSTRIES, LLC 511 W. Freshwater Way, Milwaukee, WI U.S.A. 53204 · Ph. 1-855-ONE-ZURN, Fax 919-775-3541
In Canada: **ZURN INDUSTRIES LIMITED** 7900 Goreway Drive, Unit 10, Brampton, Ontario L6T 5W6, Ph. 905-405-8272, Fax 905-405-1292

Rev. B Date: 03/18/24 C.N. No. 145930 Prod. | Dwg. No. SS Z5555-K