Z1204-ND

ADJUSTABLE VERTICAL SIPHON JET NO-HUB

SPECIFICATION SHEET

TAG _____

Dimensional Data (inches and [mm]) are Subject to Manufacturing Tolerances and Change Without Notice

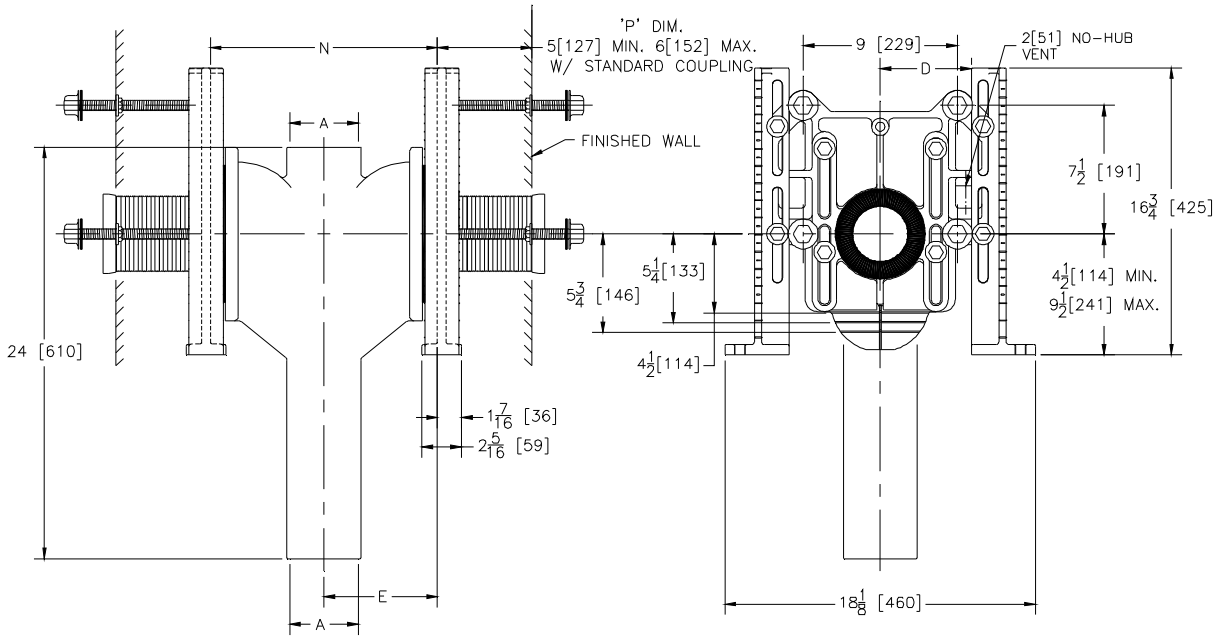

Product No.	Dimensions In Inches [mm]					Approx. Wt. Lbs. [kg]
	A	D	E	H	N	
Z1204-ND4	4 [102]	5 [127]	6-5/8 [168]	5-1/2 [140]	15-5/8 [397]	139 [63]
Z1204-ND5	5 [127]	5-1/2 [140]	6-5/8 [168]	6-1/2 [165]	15-5/8 [397]	140 [63]
Z1204-ND6	6 [152]	6 [152]	7-1/8 [181]	6-1/2 [165]	16-5/8 [422]	145 [66]

Note:
1. Min. 'P' Dim. Obtainable=2[51]
2. Two 4[102] or 5[127] side inlets as indicated.
3. Feet bolted to floor using min. 1/2[13] dia. bolts and back slots on carrier feet.

ENGINEERING SPECIFICATION: ZURN Z-1204-ND( ) Adjustable, vertical siphon jet water closet "Rigid System" with ( ) size No-Hub connections and ( ) side inlets. Complete with Dura-Coated cast iron right and left hand fitting, with 2"[51mm] vent, adjustable gasketed face plate, universal floor mounted foot supports, corrosion resistant adjustable ABS coupling with integral test cap, fixture bolts, trim, and stud protectors. Rear anchor tie down, and bonded "Neo-Seal" gasket.

PRODUCT/DEFINITION

_____ **Z1204-ND** No-Hub Stack, Double Inlets, 2[51] Vent.

PREFIXES

Z- D.C.C.I. System with Zurn "ZZ" Adjustable Coupling*

ZQ- D.C.C.I. System with Non-Adjustable Coupling

SUFFIXES

_____ **-A** Auxiliary Support Assembly (For P-Dim. greater than 18[457])

_____ **-B** Blowout Type Fixture Support

_____ **-BC** Back Cleanout

_____ **-CC** Cast Iron Coupling 6[152] Long

_____ **-CL** Coupling Length Greater than 12[305] (Specify length if greater than 6[152])

_____ **-F** Floor Mounted Back Outlet, Fixture Support

_____ **-G** Galvanized Cast Iron

_____ **-JJ** 2[51] Auxiliary Inlet

_____ **-JL** 2[51] Left Hand Auxiliary Inlet

_____ **-JR** 2[51] Right Hand Auxiliary Inlet

_____ **-M** Auxiliary Foot Support (For P-Dim. 10[254] 18[457])

_____ **-T** Threaded Stack Connection (Available on Restricted Basis Only)

_____ **-VP** Vandal Proof Trim

_____ **-W** Adapter for Womens Urinal

_____ **-29** Mechanical Test Cap Assembly (Previously Z1210-29)

_____ **-45** Finishing Frame for Siphon Jet System (For Blowout System specify -45-B) (Previously Z1210-45)

_____ **-50** Flush Valve Supply Support for W.C. (Previously Z1210-50)

_____ **-61** "ZZ" Coupling Wrench

* Regularly furnished unless otherwise specified.

Zurn Industries, LLC | **Specification Drainage Operation**
1801 Pittsburgh Avenue, Erie, PA U.S.A. 16502 · Ph. 855-663-9876, Fax 814-454-7929

In Canada | **Zurn Industries Limited**
3544 Nashua Drive, Mississauga, Ontario L4V 1L2 · Ph. 905-405-8272, Fax 905-405-1292

www.zurn.com

Rev. C
Date: 06/21/16
C.N. No. 134665
Prod. | Dwg. No. Z1204-ND