4” CENTERSET
Z812V4-XL
TAG _____

ADA DESIGNED

XL LEAD FREE

WaterSense Meets EPA Criteria Certified by IAPMO R&T *

Engineering Specifications: Zurn AquaSpec® Z812V4-XL
Polished chrome-plated cast brass faucet body with integral shanks, quarter turn ceramic disc cartridges and an 8” [203mm] centerline rigid gooseneck spout with vacuum breaker. Unit is furnished with a 2.2 GPM [8.3 L] pressure compensating aerator (complying with ANSI A112.18.1 Standard for flow), 4” [102mm] vandal-resistant color-coded metal wrist blade handles, mounting hardware and 1/2” NPSM coupling nuts for standard lavatory risers.
Zurn Lead Free products (-XL) is the line of durable, high quality brass faucets and fixtures that are designed and manufactured to comply with Section 1417 of the Safe Drinking Water Act (SDWA) which mandates the weighted average lead content of no more than 0.25% of the wetted surface.
* This product should be used with a WaterSense labeled counterpart with a compatible flush volume to ensure that the entire system meets the requirements for water efficiency and performance.

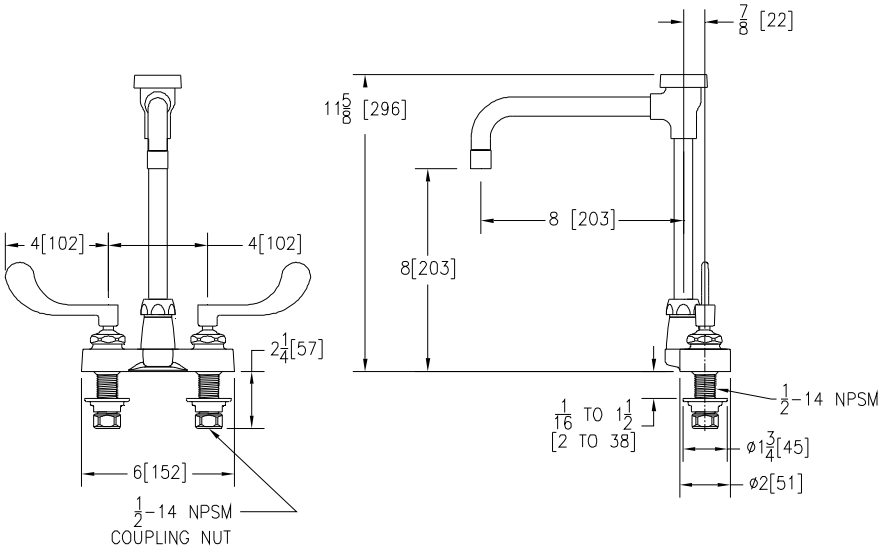

OPTIONAL ACCESSORIES *Note: All dimensions are for reference only. Do not use for pre-plumbing.*

Suffix	Description
___ -FC	2.0 GPM[7.6L]Laminar Flow Control in Base of Spout
___ -G	1-1/4” [32mm] Grid Strainer Drain
___ -HCT	Hot/Cold Text Indexes
___ -LP	Low Profile
___ -P	1-1/4” [32mm] Pop-up Drain
___ -PT	1-1/4" [32mm] Cast Brass P-Trap with a 7-1/2" [191mm] Long 17-Gauge Wall Bend
___ -2M	2.2 GPM [8.3 L] Vandal Resistant Pressure Compensating Male Aerator
___ -3M	0.5 GPM [1.9 L] Vandal Resistant Pressure Compensating Male Aerator
___ -4M	2.2 GPM [8.3 L] Vandal Resistant Pressure Compensating Male Laminar Flow
___ -5M	2.0 GPM [7.6 L] Male Spray Outlet
___ -6M	2.0 GPM [7.6 L] Male Serrated Nozzle Outlet
___ -7M*	1.0 GPM [3.8 L] Pressure Compensating Male Spray Outlet
___ -16M	1.0 GPM [3.8 L] Vandal Resistant Pressure Compensating Male Spray Outlet
___ -17M*	1.5 GPM [5.7 L] Vandal Resistant Pressure Compensating Male Aerator
___ -18M*	1.5 GPM [5.7 L] Vandal Resistant Pressure Compensating Male Laminar Flow

ZURN INDUSTRIES, LLC. ♦ COMMERCIAL BRASS OPERATION ♦ 5900 ELWIN BUCHANAN DRIVE ♦ SANFORD NC 27330
Phone: 1-800-997-3876 ♦ Fax: 919-775-3541 ♦ World Wide Web: www.zurn.com
In Canada: ZURN INDUSTRIES LIMITED ♦ 7900 Goreway Drive Unit 10 ♦ Brampton, Ontario L6T5W6 ♦ Phone: 905-405-8272 Fax: 905-405-1292

AquaSpec® is a registered trademark of Zurn Industries, LLC.

Rev. G
Dwg. No. 65356
Date:6/20/2017
Product No. Z812V4-XL