WIDESPREAD
Z831T2

TAG _____

Engineering Specifications: Zurn AquaSpec® Z831T2
Polished chrome-plated 8" [203mm] widespread with adjustable centers from 6"[152mm] to 20" [508mm], 4-1/2" [114mm] centerline rigid gooseneck spout with vacuum breaker and quarter turn ceramic disc cartridges. Unit is furnished with a 2.2 GPM [8.3 L] pressure compensating aerator (complying with ANSI A112.18.1 Standard for flow), vandal-resistant color-coded metal four arm handles, mounting hardware and 1/2" NPSM coupling nuts for standard lavatory risers. Widespread accommodates installations up to 1-1/8" [29mm] thick.

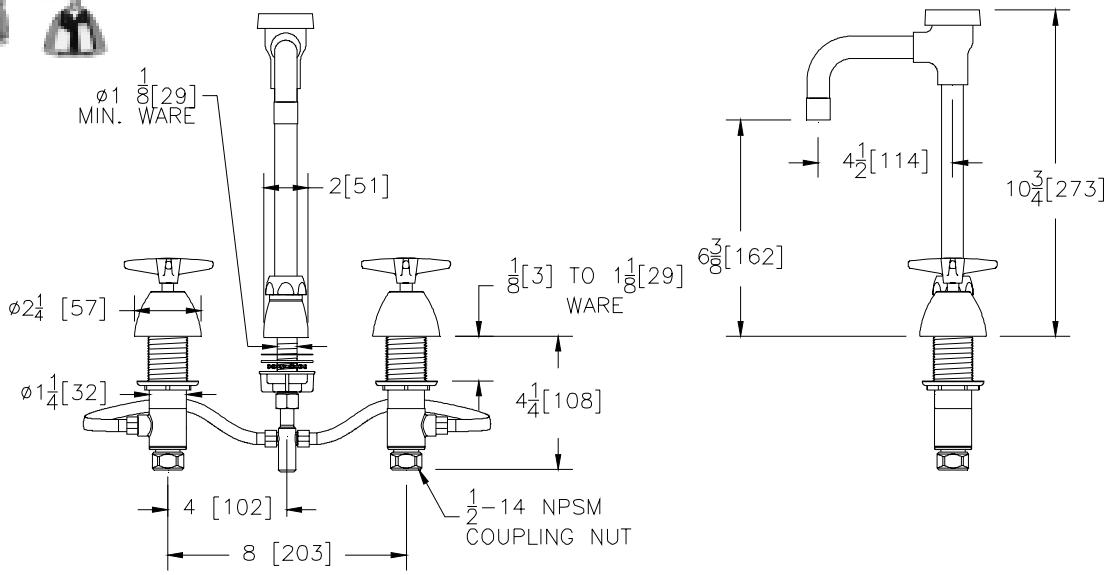

Note: *All dimensions are for reference only. Do not use for pre-plumbing*

OPTIONAL ACCESSORIES

Suffix	Description
__ -CWO	Cold Water Only
__ -FC	2.0 GPM [7.6 L] Laminar Flow Control in Base of Spout
__ -G	1-1/4" [32mm] Grid Strainer Drain
__ -GH	1-1/4" [32mm] Offset Handicap Grid Drain
__ -HCT	Hot/Cold Text Indexes
__ -HS	Hose and Spray
__ -ICT	Inter-Connecting Copper Supply Tubes for 8" In-Line Centers
__ -LP	Low Profile
__ -P	1-1/4" [32mm] Pop-Up Drain
__ -PT	1-1/4" [32mm] Cast Brass P-Trap with a 7-1/2" [191mm] Long 17-Gauge Wall Bend
__ -TW	Third Waterway
__ -6M	2.0 GPM [7.6 L] Male Serrated Nozzle Outlet
__ -7M	1.0 GPM [3.8 L] Pressure Compensating Male Spray Outlet
__ -16M	1.0 GPM [3.8 L] Vandal Resistant Pressure Compensating Male Spray Outlet
__ -17M	1.5 GPM [5.7 L] Vandal Resistant Pressure Compensating Male Aerator
__ -18M	1.5 GPM [5.7 L] Vandal Resistant Pressure Compensating Male Laminar Flow
__ -19M	1.5 GPM [5.7 L] Anti-Microbial Pressure Compensating Male Laminar Flow Outlet
__ -20M	1.0 GPM [3.8L] Vandal-Resistant Pressure Compensating Anti-Microbial Male Laminar Flow Outlet
__ -21M	1.0 GPM [3.8L] Male Laminar Flow Outlet
__ -22M	1.0 GPM [3.8L] Vandal-Resistant Male Laminar Flow Outlet

ZURN INDUSTRIES, LLC ♦ COMMERCIAL BRASS OPERATION ♦ 2640 SOUTH WORK STREET ♦ FALCONER NY 14733
Phone: 1-716-665-1132 ♦ Fax: 1-716-665-1135 ♦ World Wide Web: www.zurn.com
In Canada: ZURN INDUSTRIES LIMITED ♦ 3544 Nashua Drive ♦ Mississauga, Ontario L4V1L2 ♦ Phone: 905/405-8272 Fax: 905/405-1292

Rev. D Date: 7/21/08 C.N. No. 107619
Dwg. No. 65769 Product No. Z831T2

AquaSpec® is a registered trademark of Zurn Industries, LLC
©2008 Zurn Industries, LLC