SERVICE SINK FAUCET

Z842X1-DM

TAG _____

Engineering Specifications: Zurn AquaSpec® Z842X1-DM
Deck mounted polished chrome-plated cast brass service sink faucet with quarter turn ceramic disc cartridges, check stops and 2-1/2" [64mm] vandal-resistant color-coded metal lever handles. Unit is furnished with a 24" [610mm] riser, a 36" [914mm] stainless steel spring hose, self-closing 1.6 GPM @ 60 psi (6.1 l/min. @ 400 kPa) pre-rinse hand held valve with an insulated handle, stay open clip, a protective bumper spray head, pipe support and hose hook, mounting hardware and 1/2 NPSM coupling nuts for standard lavatory risers.

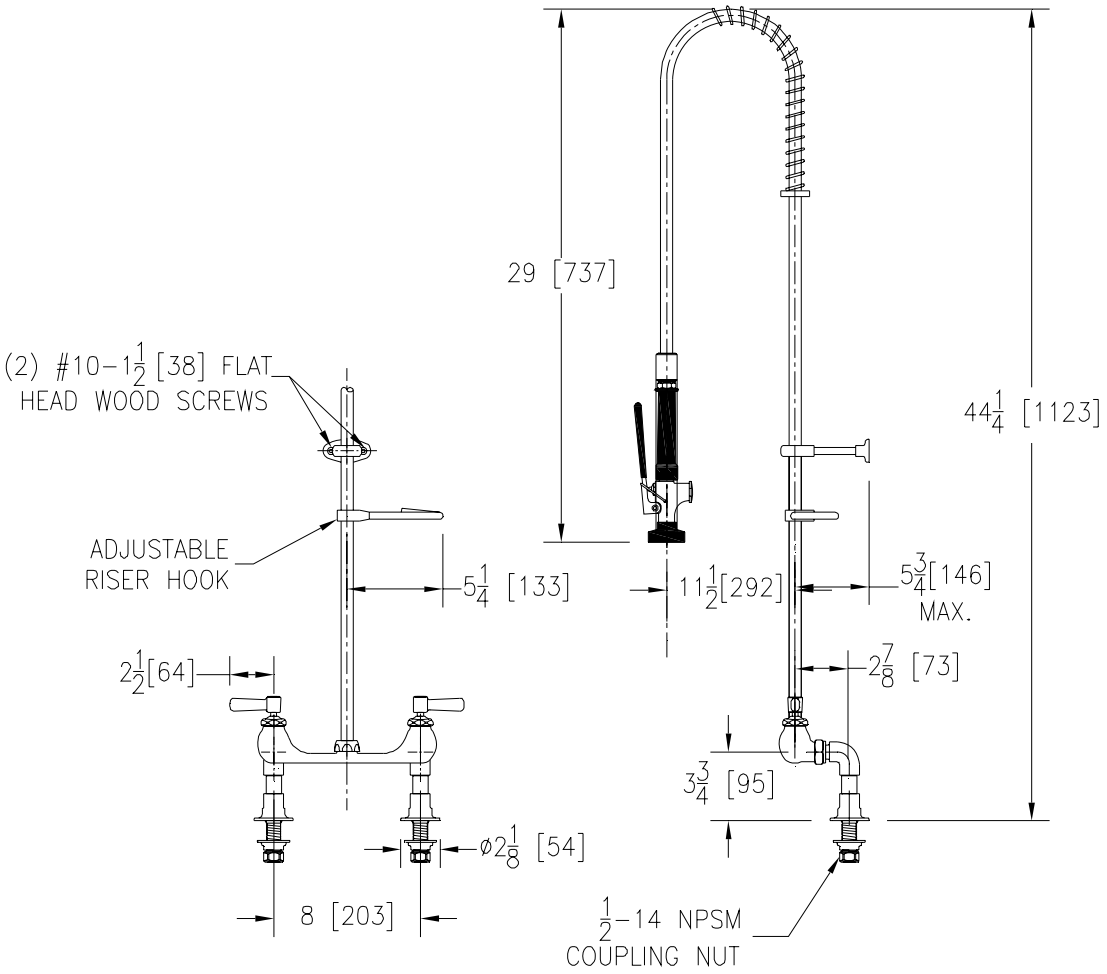

Note: All dimensions are for reference only. Do not use for pre-plumbing.

OPTIONAL ACCESSORIES

Suffix	Description
____-HCT	Hot/Cold Text Indexes
____-PR2	Pre-rinse with Angle Spray Head, Rubber Bumper Spray Outlet and Self-closing Valve
____-PR3	Pre-rinse with angled Aerated Outlet and Self-closing Valve
____-RC	Rough Chrome

ZURN INDUSTRIES, LLC ♦ COMMERCIAL BRASS OPERATION ♦ 2640 SOUTH WORK STREET ♦ FALCONER NY 14733
Phone: 1-800-997-3876 ♦ Fax: 1-919-775-3541 ♦ www.zurn.com
In Canada: ZURN INDUSTRIES LIMITED ♦ 3544 Nashua Drive ♦ Mississauga, Ontario L4V1L2 ♦ Phone: 905/405-8272 Fax: 905/405-1292

AquaSpec® is a registered trademark of Zurn Industries, LLC
©2011 Zurn Industries, LLC

Rev. H Date: 8/1/11 C.N. No. 128021
Dwg. No. 66114 Product No. Z842X1-DM