TEMP-GARD III SHOWER UNIT

Z7300-SS-MT-HW-T2

TAG _____

ENGINEERING SPECIFICATIONS: ZURN Z7300-SS-MT-HW-T2

Single handle pressure balancing mixing tub and shower unit, ceramic control cartridge with stainless steel balancing piston, built in reverse connection capability (To reverse the hot and cold inlets simply remove cartridge and turn 180º), two service stops / check stops, and adjustable limit stop. When valve is turned on it must rotate from cold through to the hot position. All exposed trim and handle are metal with polished nickel chrome plated surface. Valve supplied with diverter style tub spout, standard hand/wall shower head, hand/wall unit, 60"[1524mm] flexible metal hose, 24"[610mm] mounting bar, supply elbow and flange. The valve inlets, shower and tub outlet are all standard with 1/2" NPT female thread connections. The 1/2" copper sweat options must be specified as shown below.

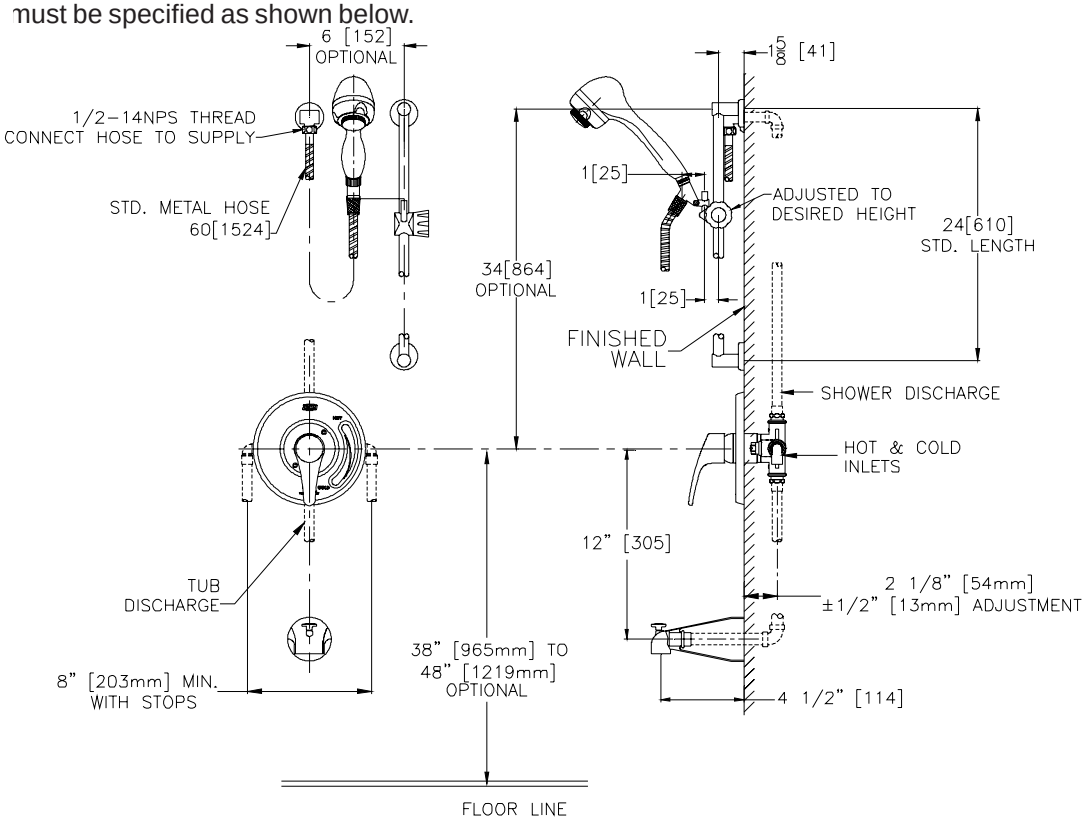

Note: *All dimensions are for reference only. Do not use for pre-plumbing.*
Parts shown as hidden lines are supplied by others.

OPTIONS (Check/specify appropriate options)*Use with Z7300 prefix*

Suffix	Description
___ -CPVC	1/2" Male NPT by CPVC Female Adaptors, shipped loose to be installed in the field.
___ -EXT	Extension Kit, Extends Valve Out by 1".
___ -PEX	1/2" Male NPT by PEX Adaptors, shipped loose to be installed in the field.
___ -SSC	1/2" Female Copper Sweat Connections w/ Service Stops
___ -ST	Sierra Series Decorative Metal Trim
___ -VB	In-Line Vacuum Breaker
___ -WF	Wall Mounting Flange For Fiberglass or Panel Wall Installation
___ -	Handwall Options (see Z7000-HW)

Additional Options

___ Z7000-SC Pair of Dual Spring Check Valves

STANDARDS

Tested to meet the following standards for valves and plumbing fittings:
ASSE Standard No. 1016
ASME A112.18.1 / CSA B125.1
IAPMO® Listed

ZURN INDUSTRIES, LLC ♦ COMMERCIAL BRASS OPERATION ♦ 2640 SOUTH WORK STREET ♦ FALCONER NY 14733
Phone: 1-716-665-1132 ♦ Fax: 1-716-665-1135 ♦ World Wide Web: www.zurn.com
In Canada: ZURN INDUSTRIES LIMITED ♦ 3544 Nashua Drive ♦ Mississauga, Ontario L4V1L2 ♦ Phone: 905/405-8272 Fax: 905/405-1292

Rev. A Date: 11/25/08 C.N. No.107932
Dwg. No. 92628 Product No. Z7300-SS-MT-HW-T2

AquaSpec® is a registered trademark of Zurn Industries, LLC
©2008 Zurn Industries, LLC