4” CENTERSET GOOSENECK

Z812C6-XL

TAG _____

Engineering Specifications: Zurn AquaSpec® Z812C6-XL
Polished chrome-plated cast brass faucet body with integral shanks, quarter turn ceramic disc cartridges and a 8” [203mm] centerline rigid or swing gooseneck spout. Unit is furnished with a 2.2 GPM [8.3 L] pressure compensating (complying with ANSI A112.18.1 Standard for flow), 6” [152mm] vandal-resistant color-coded metal wrist blade handles, mounting hardware and 1/2” NPSM coupling nuts for standard lavatory risers.

Zurn Lead Compliant* “XL” products are a line of durable, high quality brass faucets and fixtures that are designed and manufactured to comply with state laws and local codes that mandate lead content levels. Zurn “XL” products are manufactured with *not more than 0.25% lead content when used with respect to wetted surfaces of pipes and pipe fittings, plumbing fitting and fixtures: California Health & Safety Code § 116875; Vermont 9 VCA § 2470h.

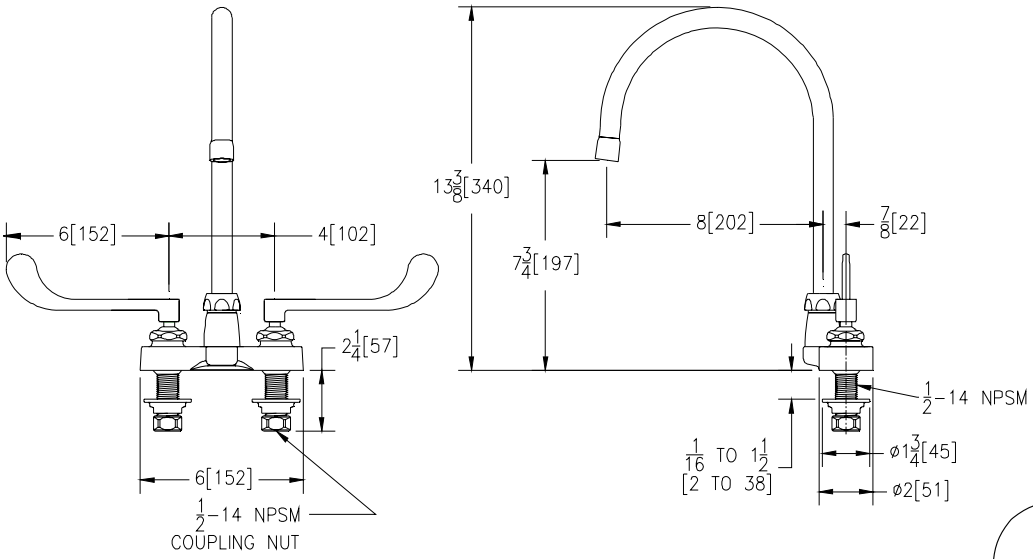

Note: *All dimensions are for reference only. Do not use for pre-plumbing*

OPTIONAL ACCESSORIES

Suffix		Description
__	-FC	2.0 GPM [7.6 L] Laminar Flow Control in Base of Spout
__	-G	1-1/4” [32mm] Grid Strainer Drain
__	-GH	1-1/4” [32mm] Offset Handicap Grid Drain
__	-HCT	Hot/Cold Text Indexes
__	-PT	1-1/4" [32mm] Cast Brass P-Trap with a 7-1/2" [191mm] Long 17-Gauge Wall Bend
__	-2F	2.2 GPM [8.3 L] Vandal-Resistant Pressure Compensating Female Aerator
__	-3F	0.5 GPM [1.9 L] Vandal-Resistant Pressure Compensating Female Spray Outlet
__	-4F	2.2 GPM [8.3 L] Vandal-Resistant Pressure Compensating Female Laminar Flow Outlet
__	-7F	1.0 GPM [3.8 L] Pressure Compensating Female Spray Outlet
__	-16F	1.0 GPM [3.8 L] Vandal Resistant Pressure Compensating Female Spray Outlet
__	-17F	1.5 GPM [5.7 L] Vandal Resistant Pressure Compensating Female Aerator
__	-18F	1.5 GPM [5.7 L] Vandal Resistant Pressure Compensating Female Laminar Flow
__	-19F	1.5 GPM [5.7 L] Anti-Microbial Pressure Compensating Female Laminar Flow Outlet
__	-21F	1.0 GPM [3.8L] Female Laminar Flow Outlet
__	-22F	1.0 GPM [3.8L] Vandal-Resistant Female Laminar Flow Outlet
__	-23F	1.5 GPM [5.7L] Pressure Compensating Female Aerator

ZURN INDUSTRIES, LLC ♦ COMMERCIAL BRASS OPERATION ♦ 2640 SOUTH WORK STREET ♦ FALCONER NY 14733
Phone: 1-800-997-3876 ♦ Fax: 1-919-775-3541 ♦ www.zurn.com
In Canada: ZURN INDUSTRIES LIMITED ♦ 3544 Nashua Drive ♦ Mississauga, Ontario L4V1L2 ♦ Phone: 905/405-8272 Fax: 905/405-1292

AquaSpec® is a registered trademark of Zurn Industries, LLC
©2009 Zurn Industries, LLC

Rev. A Date: 3/25/10 C.N. No. 126011
Dwg. No. 93102 Product No. Z812C6-XL