WIDESPREAD

Z831H4-XL

TAG _____

Engineering Specifications: Zurn AquaSpec® Z831H4-XL
Polished chrome-plated widespread with adjustable centers from 6”[152mm] to 20”[508mm], a 12”[305mm] tubular brass swing spout and quarter turn ceramic disc cartridges. Unit is furnished with a 2.2 GPM [8.3 L] pressure compensating aerator (complying with ANSI A112.18.1 Standard for flow), 4" [102mm] vandal-resistant color-coded metal wrist blade handles, mounting hardware and 1/2" NPSM coupling nuts for standard lavatory risers. Widespread accommodates installations up to 1-1/8" [29mm] thick.

Zurn Lead Compliant* “XL” products are a line of durable, high quality brass faucets and fixtures that are designed and manufactured to comply with state laws and local codes that mandate lead content levels. Zurn “XL” products are manufactured with *not more than 0.25% lead content when used with respect to wetted surfaces of pipes and pipe fittings, plumbing fitting and fixtures: California Health & Safety Code § 116875; Vermont 9 VCA § 2470h

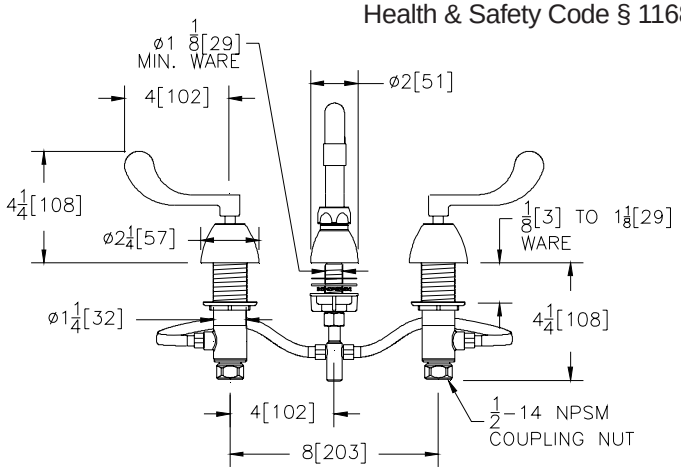

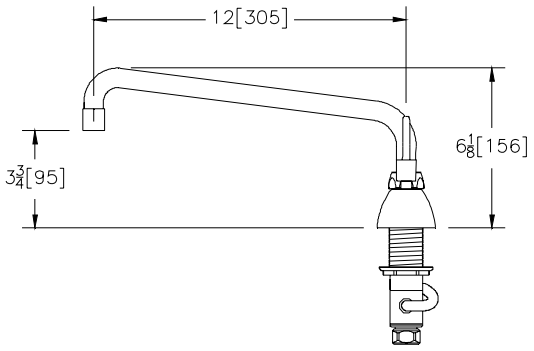

Note: *All dimensions are for reference only. Do not use for pre-plumbing*

OPTIONAL ACCESSORIES

Suffix		Description
____	-CWO	Cold Water Only
____	-G	1-1/4" [32mm] Grid Strainer Drain
____	-HCT	Hot/Cold Text Indexes
____	-HS	Hose and Spray
____	-ICT	Innerconnecting copper-supply tubes for 8” in-line centers
____	-P	1-1/4" [32mm] Pop-up Drain
____	-PT	1-1/4" [32mm] Cast Brass P-Trap with a 7-1/2" [191mm] Long 17-Gauge Wall Bend
____	-TW	Third Waterway
____	-2F	2.2 GPM [8.3 L] Vandal-Resistant Pressure Compensating Female Aerator
____	-3F	0.5 GPM [1.9 L] Vandal-Resistant Pressure Compensating Female Spray Outlet
____	-4F	2.2 GPM [8.3 L] Vandal-Resistant Pressure Compensating Female Laminar Flow Outlet
____	-7F	1.0 GPM [3.8L] Pressure Compensating Female Spray Outlet
____	-16F	1.0 GPM [3.8L] Vandal-Resistant Pressure Compensating Female Spray Outlet
____	-17F	1.5 GPM [5.7L] Vandal-Resistant Pressure Compensating Female Aerator
____	-18F	1.5 GPM [5.7L] Vandal-Resistant Pressure Compensating Female Laminar Flow Outlet
____	-19F	1.5 GPM [5.7 L] Anti-Microbial Pressure Compensating Female Laminar Flow Outlet
____	-21F	1.0 GPM [3.8L] Pressure Compensating Female Laminar Flow Outlet
____	-22F	1.0 GPM [3.8L] Pressure Compensating Vandal-Resistant Female Laminar Flow Outlet
____	-23F	1.5 GPM [5.7L] Pressure Compensating Female Aerator

ZURN INDUSTRIES, LLC ♦ COMMERCIAL BRASS OPERATION ♦ 2640 SOUTH WORK STREET ♦ FALCONER NY 14733
Phone: 1-800-997-3876 ♦ Fax: 1-919-775-3541 ♦ www.zurn.com
In Canada: ZURN INDUSTRIES LIMITED ♦ 3544 Nashua Drive ♦ Mississauga, Ontario L4V1L2 ♦ Phone: 905/405-8272 Fax: 905/405-1292

AquaSpec® is a registered trademark of Zurn Industries, LLC
©2010 Zurn Industries, LLC

Rev. A Date: 7/20/10 C.N. No.126596
Dwg. No. 93194 Product No. Z831H4-XL