# WIDESPREAD

## Z831J1-XL

TAG _____

**Engineering Specifications: Zurn AquaSpec® Z831J1-XL**
Polished chrome-plated widespread with adjustable centers from 6”[152mm] to 20”[508mm], a 9-1/2”[241mm] tubular brass swing spout and quarter turn ceramic disc cartridges. Unit is furnished with a 2.2 GPM [8.3 L] pressure compensating aerator (complying with ANSI A112.18.1 Standard for flow), 2-1/2”[64mm] vandal-resistant color-coded metal lever handles, mounting hardware and 1/2" NPSM coupling nuts for standard lavatory risers. Widespread accommodates installations up to 1-1/8" [29mm] thick.
Zurn Lead Free products (-XL) is the line of durable, high quality brass faucets and fixtures that are designed and manufactured to comply with Section 1417 of the Safe Drinking Water Act (SDWA) which mandates the weighted average lead content of no more than 0.25% of the wetted surface.

ADA DESIGNED  XL LEAD FREE  WaterSense Meets EPA Criteria Certified by IAPMO R&T

* This product should be used with a WaterSense labeled counterpart with a compatible flush volume to ensure that the entire system meets the requirements for water efficiency and performance.

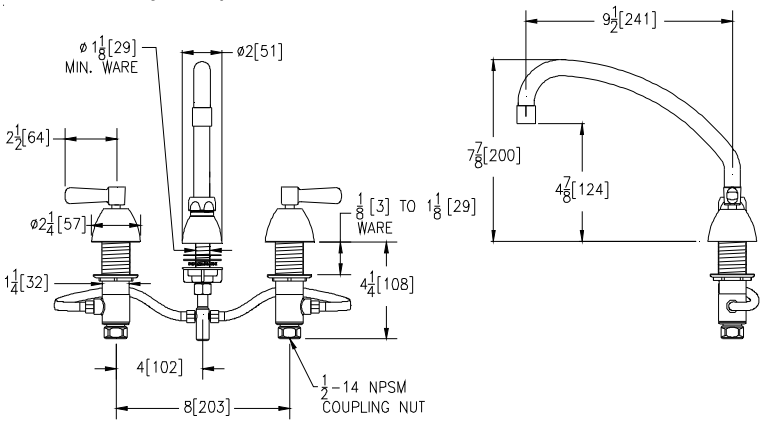


Note: *All dimensions are for reference only. Do not use for pre-plumbing*

**OPTIONAL ACCESSORIES**

| Suffix | | Description |
|---|---|---|
| ___ | -CWO | Cold Water Only |
| ___ | -G | 1-1/4" [32mm] Grid Strainer Drain |
| ___ | -GH | 1-1/4" [32mm] Offset Handicap Grid Drain |
| ___ | -HCT | Hot/Cold Text Indexes |
| ___ | -HS | Hose and Spray |
| ___ | -ICT | Inter-connecting Copper Supply Tubes for 8” In-line Centers |
| ___ | -P | 1-1/4" [32mm] Pop-up Drain |
| ___ | -PT | 1-1/4”[32mm] Cast Brass P-Trap with a 7-1/2” [191mm] Long 17-Gauge Wall Bend |
| ___ | -TW | Third Waterway |
| ___ | -2F | 2.2 GPM [8.3 L] Vandal-Resistant Pressure Compensating Female Aerator |
| ___ | -3F | 0.5 GPM [1.9 L] Vandal-Resistant Pressure Compensating Female Spray Outlet |
| ___ | -4F | 2.2 GPM [8.3 L] Vandal-Resistant Pressure Compensating Female Laminar Flow Outlet |
| ___ | -7F* | 1.0 GPM [3.8L] Pressure Compensating Female Spray Outlet |
| ___ | -16F | 1.0 GPM [3.8L] Vandal-Resistant Pressure Compensating Female Spray Outlet |
| ___ | -17F* | 1.5 GPM [5.7L] Vandal-Resistant Pressure Compensating Female Aerator |
| ___ | -18F* | 1.5 GPM [5.7L] Vandal-Resistant Pressure Compensating Female Laminar Flow Outlet |
| ___ | -19F* | 1.5 GPM [5.7 L] Anti-Microbial Pressure Compensating Female Laminar Flow Outlet |
| ___ | -21F | 1.0 GPM [3.8L] Pressure Compensating Female Laminar Flow Outlet |
| ___ | -22F | 1.0 GPM [3.8L] Pressure Compensating Vandal-Resistant Female Laminar Flow Outlet |
| ___ | -23F | 1.5 GPM [5.7L] Pressure Compensating Female Aerator |
| ___ | -24F | 0.35 GPM [1.3 L] Pressure Compensating Female Spray Outlet |
| ___ | -25F | 0.35 GPM [1.3 L] Vandal-Resistant Pressure Compensating Female Spray Outlet |


***ZURN INDUSTRIES, LLC. ♦ COMMERCIAL BRASS OPERATION ♦ 5900 ELWIN BUCHANAN DRIVE ♦ SANFORD NC 27330***
***Phone: 1-800-997-3876 ♦ Fax: 919-775-3541 ♦ World Wide Web: www.zurn.com***
***In Canada: ZURN INDUSTRIES LIMITED ♦ 7900 Goreway Drive Unit 10 ♦ Brampton, Ontario L6T5W6 ♦ Phone: 905-405-8272 Fax: 905-405-1292***



AquaSpec® is a registered trademark of Zurn Industries, LLC.